☐Urgent ☐Return receipt ☐Expand Group ☐Restricted ☐Prevent Copy ☐Confidential

Max Yuet Lun WONG/PLAND

寄件者: tmylwdpo_pd/PLAND
寄件日期: 2026年09月10日星期四 16:30
收件者: Max Yuet Lun WONG/PLAND
副本: Wai Lap TANG/PLAND; Emily Tsz Yan WONG/PLAND
主旨: 轉寄: A/YL-PS/792 _Drainage Proposal
附件: A_YL-PS_792_Temporary Drainage Proposal.pdf

From: tpbpd/PLAND <tpbpd@pland.gov.hk>
Sent: Thursday, September 10, 2026 4:18 PM
To: tmylwdpo_pd/PLAND <tmylwdpo@pland.gov.hk>
Cc: Kiff Kit Fu YIU/PLAND <kkfyiu@pland.gov.hk>
Subject: Fw: A/YL-PS/792 _Drainage Proposal

From: Chong Hermose <[redacted]>
Sent: Thursday, September 10, 2026 4:17 PM
To: tpbpd/PLAND <tpbpd@pland.gov.hk>
Cc: Emily Tsz Yan WONG/PLAND <etywong@pland.gov.hk>
Subject: A/YL-PS/792 _Drainage Proposal

城規會/規劃處：

大家好。

現附上規劃申請編號：A/YL-PS/792 的 Drainage Proposal ，請查收。

謝謝。

Thanks

Ms Chong
([redacted])

TEMPORARY DRAINAGE PROPOSAL



Proposed Temporary Warehouse for a Period of 3 Years at Lots 665 RP (Part), 676 RP, 677 RP, 678 RP(Part),679 RP(Part),680 RP(Part),681,682,683 （Part), 687(Part), 689(Part) and 954 RP (Part)in D.D.122, Ping Shan, Yuen Long, New Territories

s16 Application No. A/YL-PS/792

（Sep 2026）

1. INTRODUCTION

1.1 Project Background

This Drainage Proposal is prepared in support of the Section 16 Planning Application for the Proposed Temporary Warehouse for a Period of 3 Years at Lots 665 RP (Part), 676 RP, 677 RP, 678 RP (Part), 679 RP (Part), 680 RP (Part), 681, 682, 683 (Part), 687 (Part), 689 (Part) and 954 RP (Part) in D.D. 122, Ping Shan, Yuen Long, New Territories.

The purpose of this proposal is to demonstrate that the proposed development will not cause any adverse drainage impact on the application site and its surrounding areas, fully complying with the guidelines and statutory technical manuals issued by the Drainage Services Department (DSD).

1.2 Site Description

- **Total Site Area:** Approximately **8,530 m²**.
- **Current Site Condition:** The site consists of a mix of vacant lands, agricultural lots, and partially modified profiles typical of the Ping Shan rural context.
- **Proposed Surface Cover:** The site surface will undergo planned paving modifications based on its functional layouts, altering the local stormwater runoff characteristics.
- **Topography:** The site is generally flat with mild structural gradients across the D.D. 122 layout grid.

---

2. EXISTING DRAINAGE SYSTEM

Based on inspections and official DSD Drainage Record Plans, the baseline conditions around the subject boundaries are outlined as follows:

- Existing open stormwater ditches and public collector pipes are present within the Ping Shan local village/highway network adjacent to the application site boundaries.
- Natural overland sheet flow routes and upstream external catchments bypass the project boundaries without direct obstruction.
- The downstream connection point managed by DSD has been visually cross-checked to ensure sufficient operating baseline clearance without observable structural blockages.

---

3. PROPOSED DRAINAGE WORKS

To successfully mitigate stormwater runoff adjustments generated by the newly managed fields, a dedicated internal perimeter drainage infrastructure will be implemented.

3.1 Stormwater Drainage Layout

- **Peripheral Concrete Channels:** A standard perimeter concrete **550mm U-channel** configured with a structural slope profile gradient of at least **1:200** will run along the internal site boundaries to intercept and contain total internal runoff.
- **Catchpits with Sand Traps:** Cast-in-situ concrete catchpits (minimum internal dimension **900mm x 900mm**) integrated with specialized **sand traps** (minimum **300mm** structural depth) will be located at designated turnings, junctions, and spacing intervals not exceeding **40 meters**.
- **Final Connections:** The collected internal sheet flows pass through the terminal sand trap facility and discharge systematically out into the chosen public DSD stormwater channel network via a dedicated pipe outfall connection.

3.2 Flood Prevention Measures for Open Areas

- **Internal Level Alignment:** Internal ground surface formation layers will be graded with cross-falls sloping straight toward the peripheral open concrete U-channels to eliminate standing pond water.
- **Unobstructed Boundary Runoff:** Structural footings for any perimeter fences or boundary structures will be designed to avoid truncating pre-existing external village drainage lines.

---

4. DRAINAGE CALCULATION & HYDRAULIC ASSESSMENT

4.1 Design Criteria

The hydraulic calculations are based on the Rational Method specified in the **DSD Stormwater Drainage Manual (SDM)**.

- **Design Return Period:** 1 in 10 years (Standard criterion for temporary storage/warehouse uses in rural areas).
- **Total Site Area (A):** 8,530 m² (0.853 hectares) based on the application layout.
- **Runoff Coefficient (C):** 0.85 (Composite coefficient assuming a combination of warehouse building roofs, concrete hardstanding driveways, and minor unpaved boundary zones).

4.2 Runoff Estimation

The peak runoff flow rate (Q_{peak}) is calculated using the Rational Formula:

$$Q_{\text{peak}} = \frac{C \times I \times A}{3600}$$

Where:

- Q_{peak} = Peak runoff flow rate (m³/s)
- C = Composite runoff coefficient = 0.85
- I = Rainfall intensity for a duration equal to the time of concentration ($t_c = 10$ mins) = 220 mm/hr (Derived from Yuen Long regional DSD IDF curves).
- A = Catchment Area = 0.853 ha

$$\mathbf{Q_{peak}} = \frac{0.85 \times 220 \times 0.853}{3600} = \mathbf{0.0443}\ \text{m}^3/\text{s}$$

4.3 Hydraulic Capacity of Proposed Channel

Manning's Equation for steady open channel flow is used to evaluate the discharge capacity of the proposed 550mm wide × 550mm deep concrete U-channel:

$$V = \frac{1}{n} \times R^{2/3} \times S^{1/2}$$

$$Q_{\text{cap}} = A_c \times V$$

- **Manning's roughness coefficient (n):** 0.013 (Standard engineering baseline for smooth precast or cast-in-situ concrete).
- **Design Channel Slope (S):** 1:150 (0.0067 m/m) (Conservative minimum longitudinal design gradient).
- **Proposed Channel Size:** 550 mm wide × 550 mm deep. Flow depth is assumed at 80% capacity to guarantee an adequate safety freeboard allowance (d = 0.44 m, leaving a 110 mm dry freeboard).
- **Cross-Sectional Area of Flow (\(A_{c}\)):** 0.55 m × 0.44 m = 0.242 m²
- **Wetted Perimeter (\(P_{w}\)):** 0.55 m + 2(0.44 m) = 1.43 m
- **Hydraulic Radius (R):** \(A_c / P_w = 0.242 / 1.43 = 0.1692\text{ m}\)

Calculated Velocity & Flow Capacity:

$$V = \frac{1}{0.013} \times (0.1692)^{2/3} \times (0.0067)^{1/2} = 1.922 \text{ m/s}$$

$$\mathbf{Q_{cap}} = 0.242 \times 1.922 = \mathbf{0.4650} \text{ m}^3/\text{s}$$

4.4 Hydraulic Conclusion

Since the computed maximum channel capacity ($Q_{\text{cap}} = \mathbf{0.4650}$ m³/s) is significantly greater than the maximum estimated peak site runoff ($Q_{\text{peak}} = \mathbf{0.0443}$ m³/s), the channel is operating at a highly safe utility buffer. The proposed 550mm perimeter concrete U-channel provides more than adequate hydraulic capacity to convey storm surface water safely, eliminating any risk of structural overflow or flooding to adjacent lots.

Furthermore, the calculated flow velocity of **1.922 m/s** comfortably falls within the DSD recommended velocity envelope (0.7 m/s to 3.0 m/s), effectively preventing internal sediment accumulation (self-cleansing) while mitigating the risk of structural scouring.

5. Maintenance Plan

To ensure the long-term effective operation of the drainage system, the following maintenance plan will be implemented:

- **Regular Inspection**: Inspect all drainage channels, catchpits, and discharge points at least once a month, especially before and after heavy rainfall.
- **Desilting**: Regularly clean sand traps in catchpits and remove silt, debris, and rubbish from U-channels to ensure unobstructed flow.
- **Structural Inspection**: Annually inspect the structural integrity of drainage facilities and promptly repair any damage.

- **Vegetation Management**: Regularly trim vegetation around drainage channels to prevent root intrusion or leaf blockages.

6. Conclusion

This proposal presents a drainage scheme designed to provide an effective and DSD-compliant drainage system for the proposed Temporary Recyclable Collection Centre. By implementing peripheral U-channels, catchpits, and appropriate discharge measures, combined with permeable paving, stormwater runoff within the site can be effectively managed, minimizing adverse drainage impacts on the surrounding environment. We will fully cooperate with DSD's approval requirements and provide further detailed designs and information as needed.

Proposed Drainage Plan

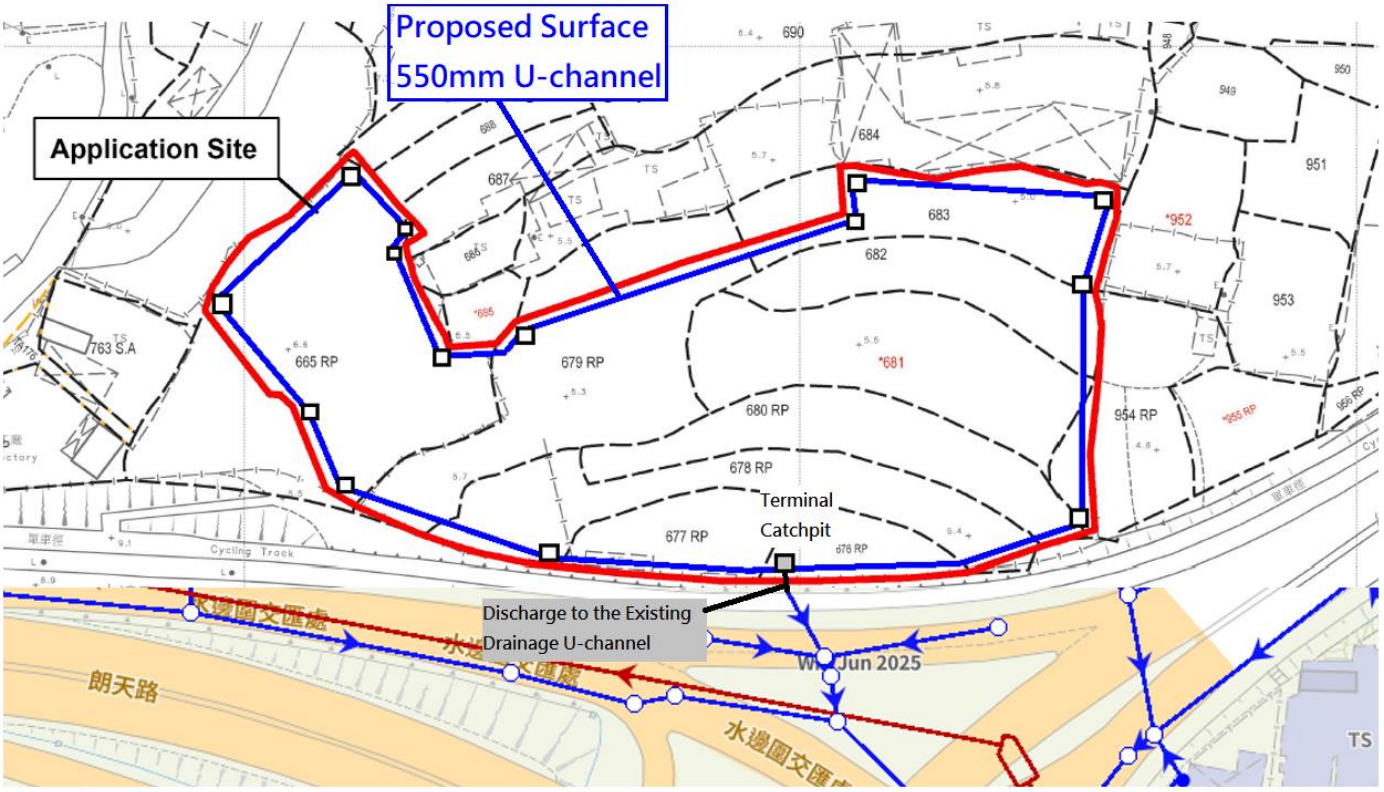

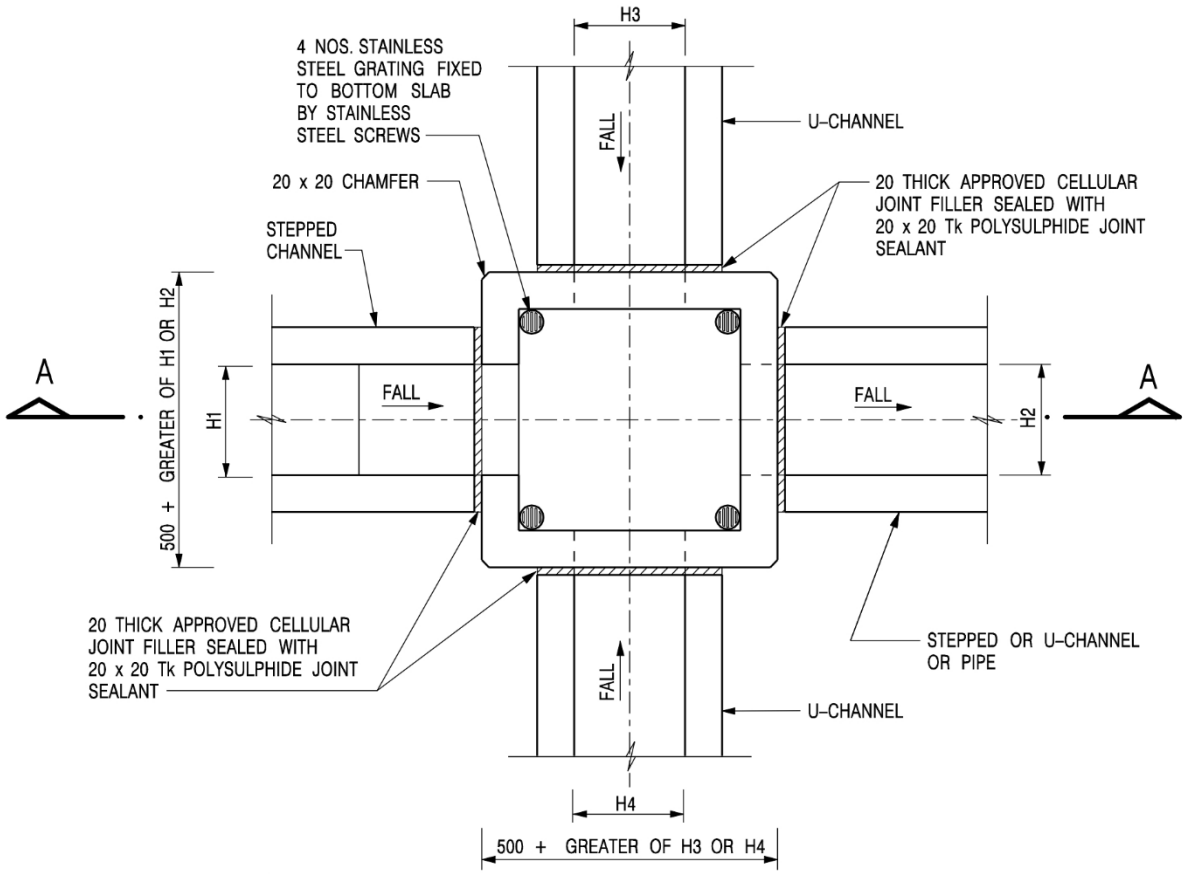

PLAN

NOMINAL SIZE (LARGEST OF H1, H2, H3 & H4)	B
300 – 600	150
675 – 900	175

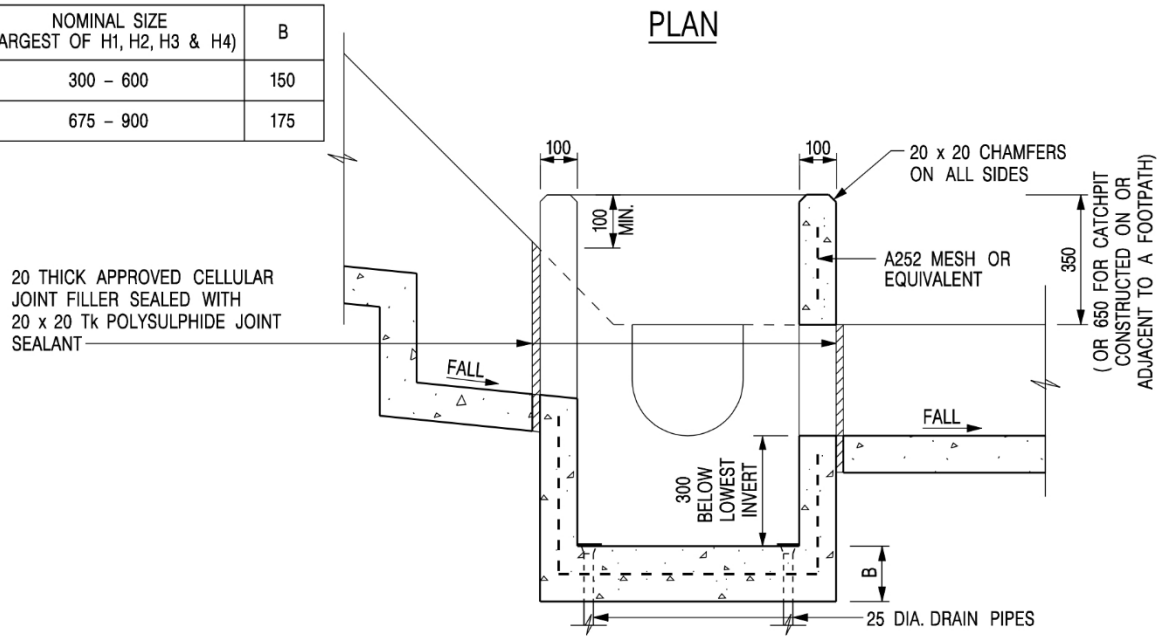

SECTION A – A

NOTES:

1. ALL DIMENSIONS ARE IN MILLIMETRES.

2. REFER TO SHEET 2 FOR OTHER NOTES.

REF.	REVISION	SIGNATURE	DATE
–	FORMER DRG. NO. C2406J.	Original Signed	03.2015

CATCHPIT WITH TRAP

(SHEET 1 OF 2)

CIVIL ENGINEERING AND DEVELOPMENT DEPARTMENT

SCALE 1 : 20

DATE JAN 1991

DRAWING NO. C2406 /1

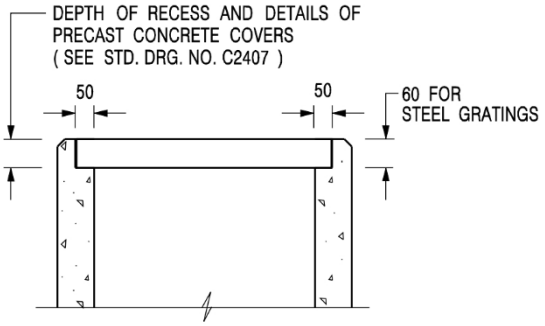

ALTERNATIVE TOP SECTION
FOR PRECAST CONCRETE COVERS / GRATINGS

NOTES:

1. ALL DIMENSIONS ARE IN MILLIMETRES.
2. ALL CONCRETE SHALL BE GRADE 20 /20.
3. CONCRETE SURFACE FINISH SHALL BE CLASS U2 OR F2 AS APPROPRIATE.
4. FOR DETAILS OF JOINT, REFER TO STD. DRG. NO. C2413.
5. CONCRETE TO BE COLOURED AS SPECIFIED.
6. UNLESS REQUESTED BY THE MAINTENANCE PARTY AND AS DIRECTED BY THE ENGINEER, CATCHPIT WITH TRAP IS NORMALLY NOT PREFERRED DUE TO PONDING PROBLEM.
7. UPON THE REQUEST FROM MAINTENANCE PARTY, DRAIN PIPES AT CATCHPIT BASE CAN BE USED BUT THIS IS FOR CATCHPITS LOCATED AT SLOPE TOE ONLY AND AS DIRECTED BY THE ENGINEER.
8. FOR CATCHPITS CONSTRUCTED ON OR ADJACENT TO A FOOTPATH, STEEL GRATINGS (SEE DETAIL 'A' ON STD. DRG. NO. C2405 /2) OR CONCRETE COVERS (SEE STD. DRG. NO. C2407) SHALL BE PROVIDED AS DIRECTED BY THE ENGINEER.
9. IF INSTRUCTED BY THE ENGINEER, HANDRAILING (SEE DETAIL 'J' ON STD. DRG. NO. C2405 /5; EXCEPT ON THE UPSLOPE SIDE) IN LIEU OF STEEL GRATINGS OR CONCRETE COVERS CAN BE ACCEPTED AS AN ALTERNATIVE SAFETY MEASURE FOR CATCHPITS NOT ON A FOOTPATH NOR ADJACENT TO IT. TOP OF THE HANDRAILING SHALL BE 1 000 mm MIN. MEASURED FROM THE ADJACENT GROUND LEVEL.
10. MINIMUM INTERNAL CATCHPIT WIDTH SHALL BE 1 000 mm FOR CATCHPITS WITH A HEIGHT EXCEEDING 1 000 mm MEASURED FROM THE INVERT LEVEL TO THE ADJACENT GROUND LEVEL. AND, STEP IRONS (SEE DSD STD. DRG. NO. DS1043) AT 300 c/c STAGGERED SHALL BE PROVIDED. THICKNESS OF CATCHPIT WALL FOR INSTALLATION OF STEP IRONS SHALL BE INCREASED TO 150 mm.
11. FOR RETROFITTING AN EXISTING CATCHPIT WITH STEEL GRATING, SEE DETAIL 'G' ON STD. DRG. NO. C2405 /4.
12. SUBJECT TO THE APPROVAL OF THE ENGINEER, OTHER MATERIALS CAN ALSO BE USED AS COVERS / GRATINGS.

REF.	REVISION	SIGNATURE	DATE
A	MINOR AMENDMENT.	Original Signed	04.2016
–	FORMER DRG. NO. C2406J.	Original Signed	03.2015

CATCHPIT WITH TRAP
(SHEET 2 OF 2)

CIVIL ENGINEERING AND DEVELOPMENT DEPARTMENT

SCALE 1 : 20

DATE JAN 1991

DRAWING NO. C2406 /2A

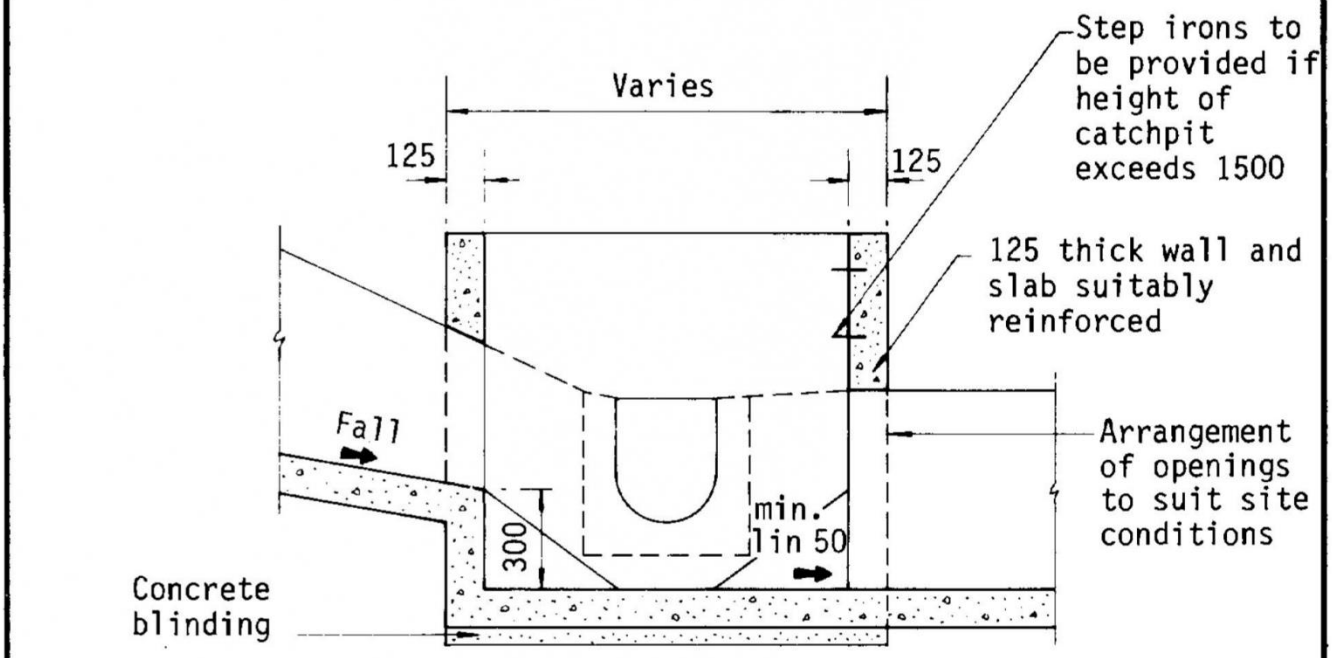

SECTION A-A

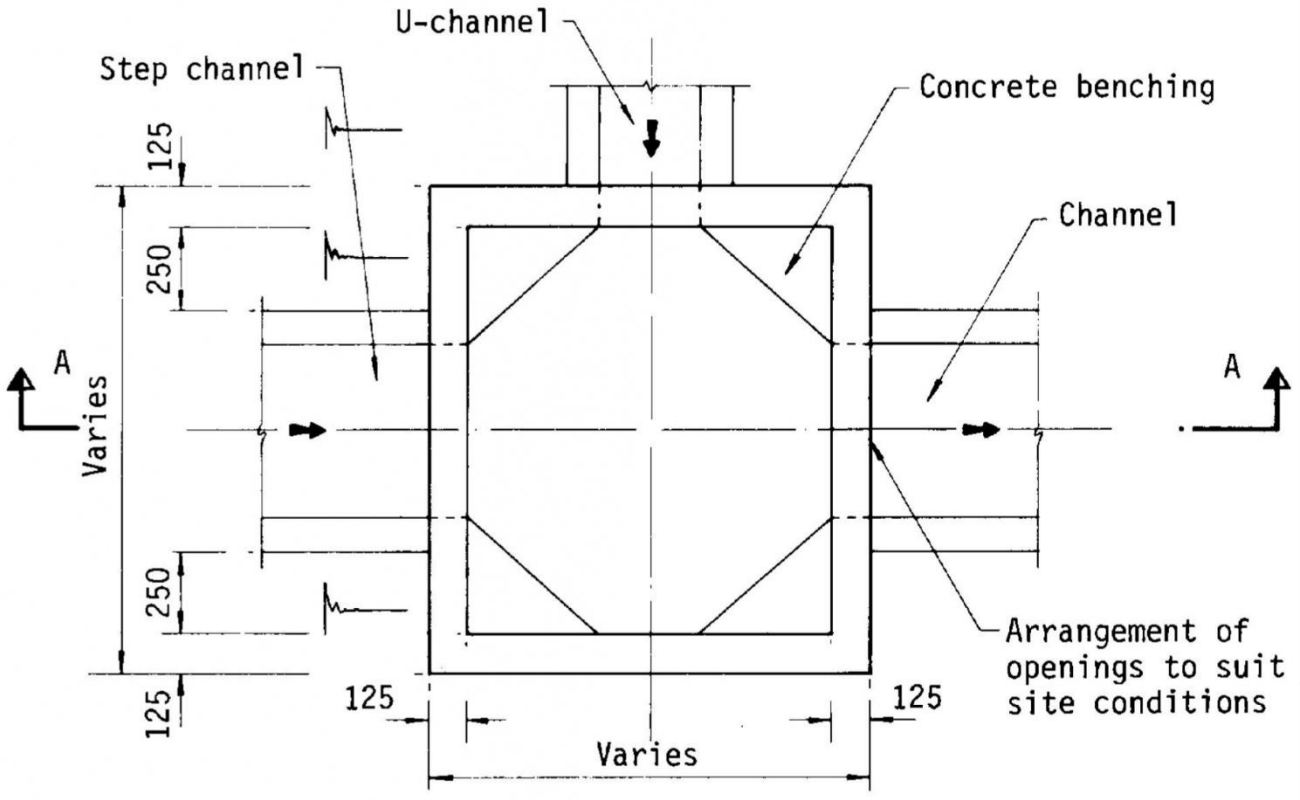

PLAN

Note : All dimensions in millimetres

Figure 8.10 - Typical Details of Catchpits

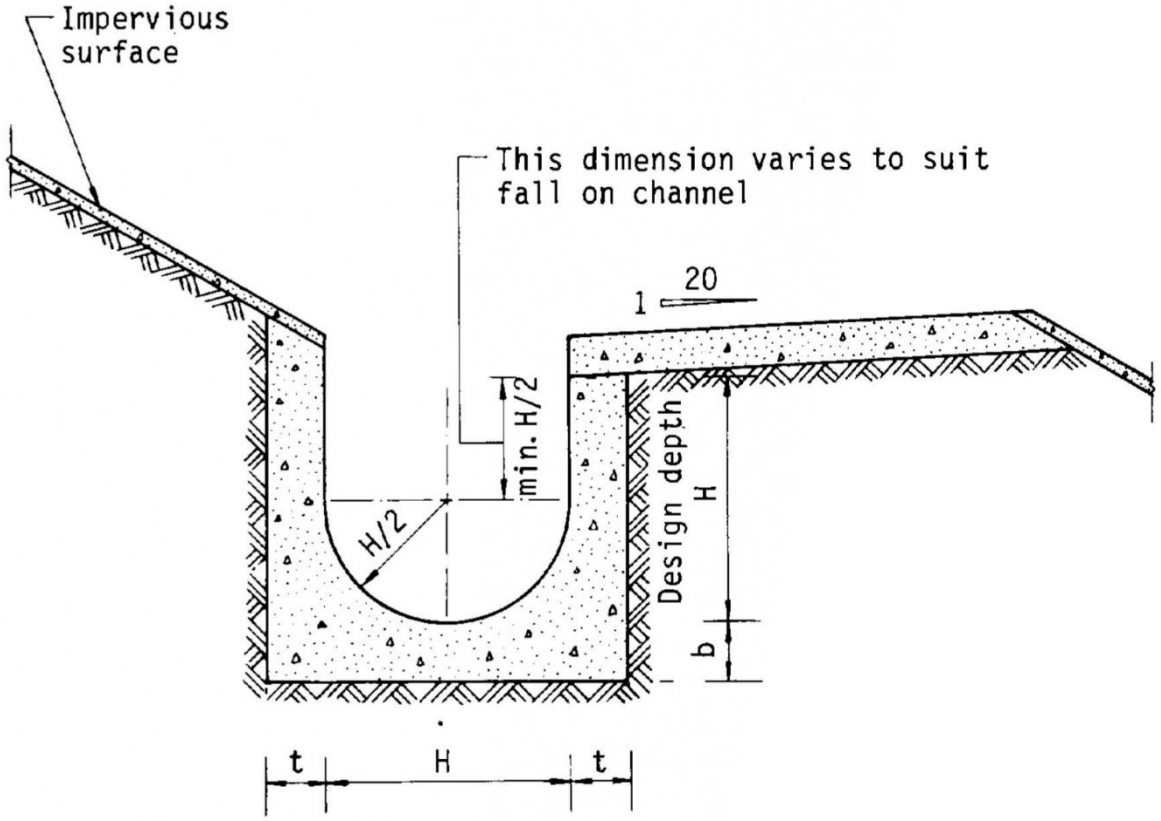

Dimensions of U - channel		
Nominal size of channel H (mm)	Thickness t (mm)	Thickness b (mm)
225 to 600	150	150
675 to 1200	175	225

Figure 8.11 - Typical U-channel Details